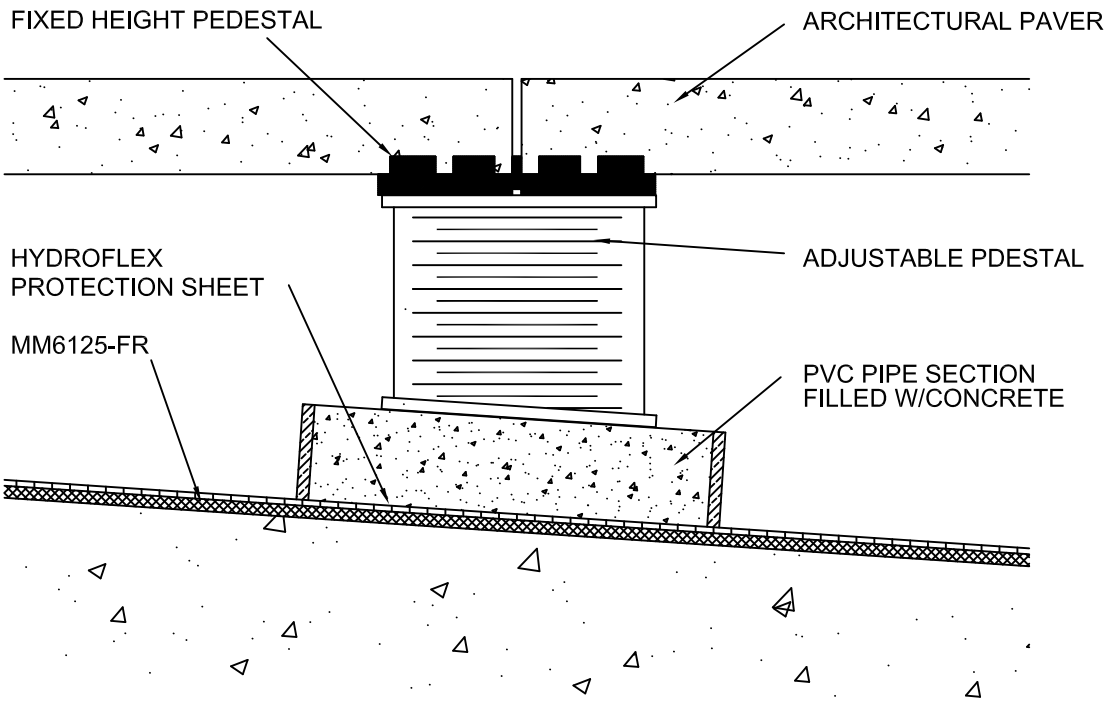

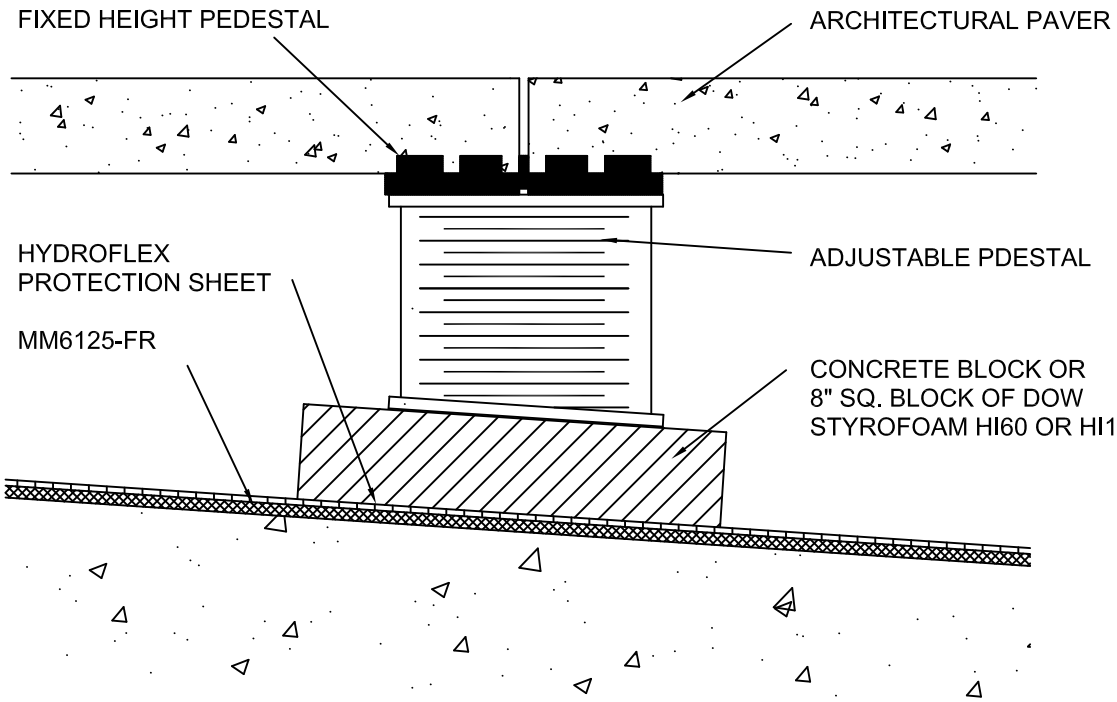

HYDROTECH

ULTIMATE ASSEMBLY

AMERICAN HYDROTECH, INC.

ADDITIONAL PEDESTAL
EXTENSION MATERIALS

SCALE: NONE
DATE: 12/01/17

UA-3

This information is intended only for general conceptual purposes. It is based on data and knowledge considered to be true and correct. It is offered for the user's consideration, investigation and verification and is not intended to substitute for the advice provided by appropriate professionals. Hydrotech assumes no liability for the use of this information. The determination of the suitability and applicability of this information is the sole responsibility of the user.